PETRARCA

CODE: **PET0207DX0001G01FE**

Technical Data Sheet

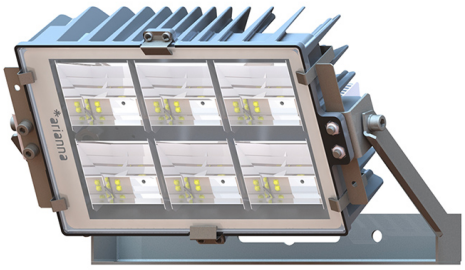

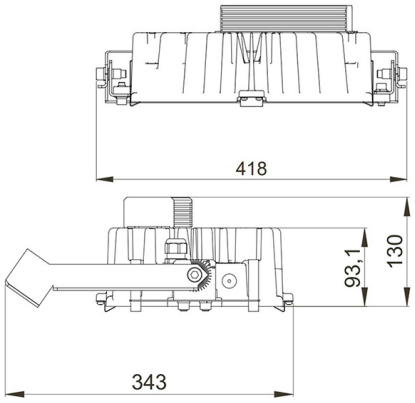

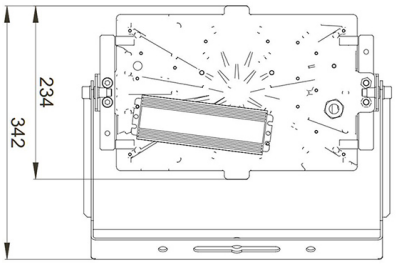

PRODUCT FEATURES

Voltage	220÷240 V ac
Frequency	50/60 Hz
Electrical safety class	I
Power supply	DALI
Driving current	525 mA
Service environment temperature	-30° ÷ +50° C
Storage room temperature	-40° ÷ +80° C
Certifications	ENEC, CE, RoHS, EN60598-1, EN60598-2-5
Surge protection	10 kV (10 kA max)

MECHANICAL FEATURES

Body	Die-cast aluminum EN AB 44300
Copper content	< 0,1%
Total weight with driver	7 Kg
Total weight without driver	5.8 Kg
Area exposed to the wind	0,10 - 0,05 - 0,03 m^2
Ingress protection	IP66
Shock protection	IK08
Diffuser	Glass tempered extra clear 4 mm
External screws	A2 stainless steel
Cable entry	Maximum diameter 14 mm
Mounting	Floodlight bracket

DRIVER FEATURES

Power factor (full-load)	> 0,90
Failure rate	< 10% at 100.000 h
Substitutability	External replaceable driver
Driver position	EXTERNAL
Flicker factor	< 3%

LED MODULE FEATURES

LED	Ceramic based power LED
Module Efficiency	up to 170 lm/W
Color temperature	3000 K
Color rendering index	> 70
L90B10	> 217.000 h
L90 (TM-21)	> 72.600 h
Optical system	Reflection optics

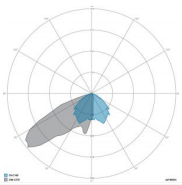

OPTICS: 1-SPORT ASYMMETRICAL

CODE	FLUX [lm]	POWER [W]	EFFICIENCY [lm/W]
PET0207DX0001G01FE	18928	153	124

Visit www.ariannaled.com for the complete list of certified products.
Flux and power data are corresponding to typical values referring to ambient temperature (Ta) equal to 25° C or 77° F with tollerance ± 7%.
In order to facilitate continuous updating of products Arianna spa reserves the right to make changes without notice.

Arianna spa via dell'Industria 14 - 35020 Brugine (PD) t +39 049 7389920 f +39 049 7389924
info@ariannaled.com/www.ariannaled.com P.I. 04387780283